TrueTech Energy
TT - CNST Series

ELECTRIC WATER HEATERS

The TT - CNST series is available with storage capacities from 200 to 5,000 Liters . All tanks feature ASME / EN tank construction. With input choices as high as 432 kW on 200 through 5,000 liters models, the **TT - CNST** series can be used for maximum-demand hot water supply services

Our Flexible, Secure And Efficient Production Processes Offers High Quality Products , Satisfied Customers, Sensible Costs, Reduced Maintenance Costs , Long Service Life , Easy Installation & Commissioning And Short Lead Times

PROJECT-BASED
SPECIAL CERTIFICATION & DESIGN

ASME **MERKBLATT**

TrueTech construction type electrical water heaters are designed for compactness and ease of use. For better durability under the different usage, our freshwater water heaters are made of 304L or 316L stainless steel

STANDARD FEATURES

Large volume electric high power commercial- water heaters are now available - in 200 to 5,000 liters storage – vertical round, vertical square and horizontal – with energy saving performance!

- ASTM 304L Stainless steel tank
- Stainless steel heating elements
- Galvanized steel Outer jacket & control panel
- Magnesium anodes with anode tester
- Immersion type Adjustable Mechanic thermostat
- Manual reset high limit Safety thermostat
- ASME temperature and pressure relief valve
- Residual Current Device
- Hand-hole sediment cleanout
- Glass / Rock wool inner tank insulation
- Temperature and pressure-gauges

***Efficiency** | All models meet or exceed ASHRAE energy efficiency standards*

OPTIONAL FEATURES

- ASTM 316L Stainless steel tank Outer jacket & Control panel
- Thermic magnetic main breaker and 24V.AC command voltage
- Immersion type PLC / Digital thermostat-thermometer
- Low - or high water pressure switch
- Protection system against waterless operation
- Lifting lugs
- Warning system incase of over heating & low water level
- *Manway (2000-liters and larger capacity- models only)*
- *150 psi or 160 psi working pressure*
- *Electronic step controller*

Warranty

2-Year limited tank warranty-

See Commercial Warranty Certificate for - complete information

TrueTech Energy
TT - CNST Series

Large Volume Construction Type Electric Water Heaters
30 to 5,000 liters Capacities
Voltages: 208, 240, 277, 380, 415, 480, 600V and 690V
frequencies;50/6Hz
Vertical & Square and Horizontal types

TrueTech Energy
TT - CNST Series

ADVANCED FEATURES

- **INCOLOY SHEATH HEATING ELEMENTS**

Industrial-grade Incoloy sheathed heating elements are designed for rugged longlasting commercial service

- **SOLID STATE MODULATING STEP CONTROL**

Solid state electronic control device that modulates input to match load through progressive sequencing of steps

- **VOLT FREE OUTPUT CONTACTS FOR BMS (IPMS)**
- **200 OR 240 PSI WORKING PRESSURE**

100 % Right Products for Your Systems

- **CIRCULATING PUMP PACKAGE**

Circulating pump and piping sized to turn over entire storage capacity of tank once each hour.Recommended to optimize available water at temperature in horizontal tanks particularly

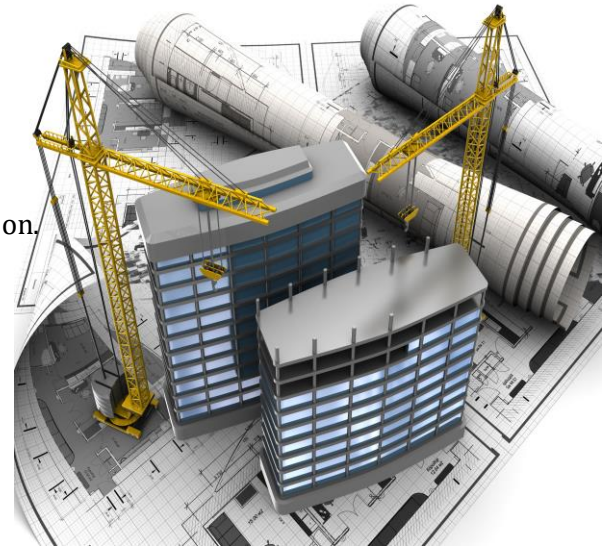

- **SAFETY DOOR INTERLOCK**

Prevents opening of control panel door when heater power supply is on.

- **ISOLATION VALVES (RELIABLE BALL VALVES)**
- **SPECIAL SHOCK AND VIBRATION ISOLATORS**
- **LAMP TEST SYSTEMS**
- **DUBLEX OR 316Ti TANK**
- **FLOOR STABILIZER SPECIAL MOUNTING FOOT**
- **HALLOGEN FREE CABLES AND CABLE CHANNELS**
- **DISINFECTIVE AND PREVENTIVE SYSTEM FOR LEGIONELLA BACTERIA**
- **PHASE PROTECTION RELAY**
- **SAFETY SWITCH FOR ELECTRIC COMMAND PANEL**

Factory Hydrostatic And Function Tests Before Shipping

For additional information please call the factory with the following:

- Required gallons per hour recovery needed
- Temperature rise needed
- Single or Double-Wall Coil
- If steam is the energy source, the steam pressure?
- If boiler water is the energy source, the temperature ?

TrueTech Energy
TT - CNST Series

PLACE OF USAGE

- Industrial Type Applications
- Hospitals
- Hotels
- Factories
- Construction Sites
- GYMs
- Textile
- Chemistry
- Army Bases

We Delivery Hi Quality Products To Every Corner Of the World

Best Manufacturing & Delivery Time

We guarantee Best Manufacturing & Delivery Time

Best Price

With effective integration , the operation cost is lower down and we will provide a more favorable price and Professional service to your Company

Customer Satisfaction

100% customer satisfaction Guarantee

Save Time & Money

Project-Based Technical Support

3D Mechanical Drawings

P&ID Drawings

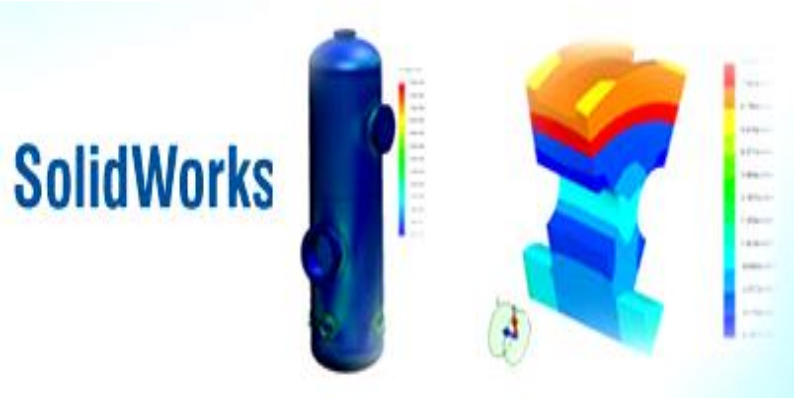

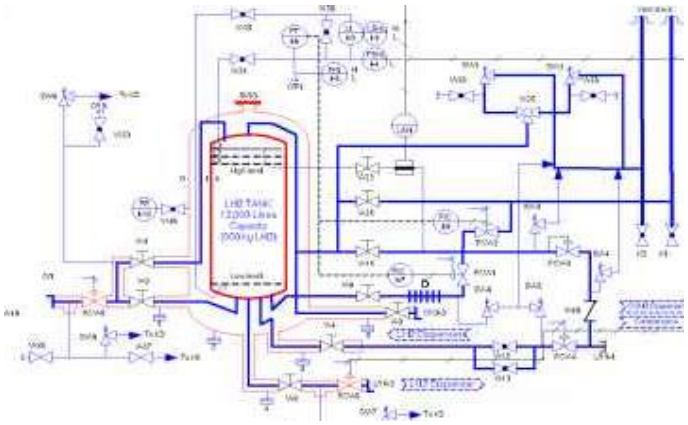

Electrical Drawings & Diagrams

2D Mechanical Drawings

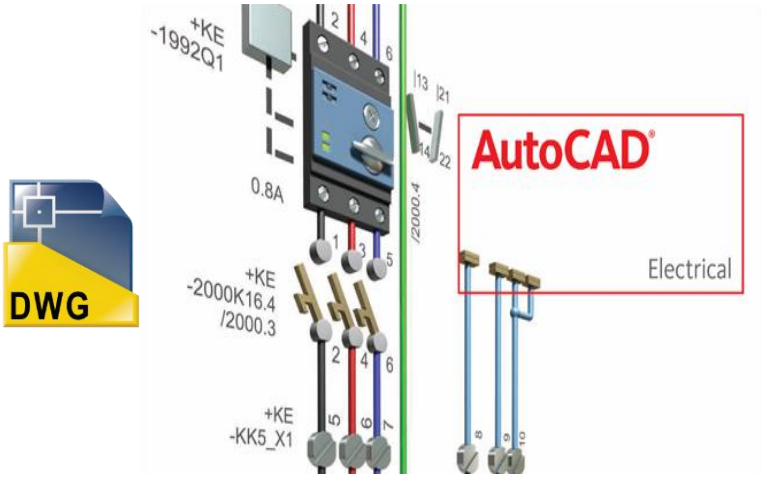

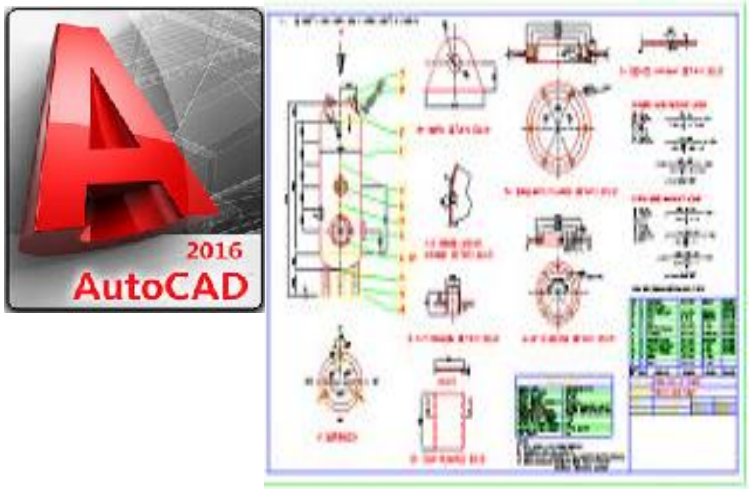

Vibration and shock analysis

(on request)

Acoustic analysis

(on request)

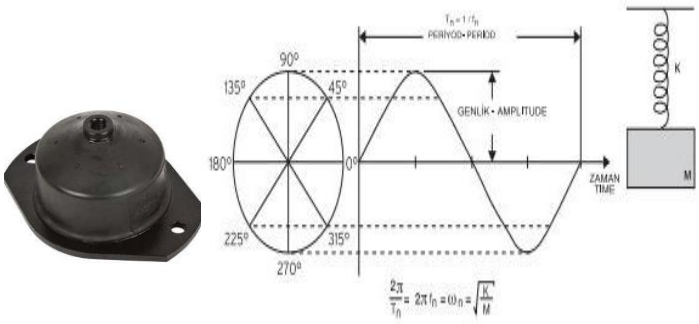

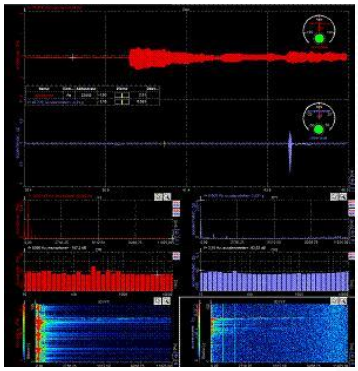

Project Management

Each Project , we will assign a Project Managerand sales person to Follow the whole process from quotation to after- sale

After-Sales

Technical Support And Services

MANUFACTURING AND DESIGN CODES

AD 2000 MERKBLATT PRESSURE VESSELS DESIGN CODE
ASME BOILER AND PRESSURE VESSEL CODE (SEC. VIII DIV.1 & 2 SECTION VIII ,SECTION VIII)
EN 13445 SERIES UNFIRED PRESSURE VESSELS CODE
EN 13458 SERIES PRESSURE VESSELS CODE
TEMA THE TUBULAR EXCHANGER MANUFACTURERS ASSOCIATION
CODAP FRENCH CODE FOR CONSTRUCTION OF UNFIRED PRESSURE VESSELS
PD 5500 SPECIFICATION FOR UNFIRED, FUSION WELDED PRESSURE VESSELS
UL 1453 STANDARD FOR ELECTRIC BOOSTER AND COMMERCIAL STORAGE TANK WATER HEATER
UL 174 STANDARD FOR HOUSEHOLD ELECTRIC STORAGE TANK WATER HEATERS

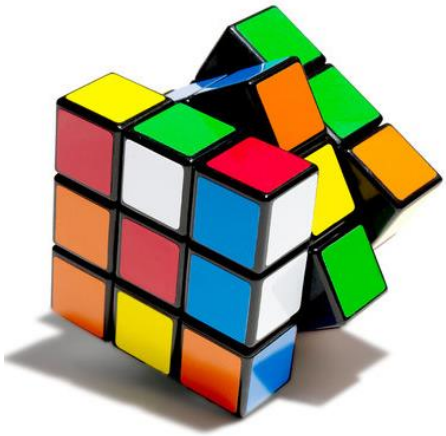

STORAGE TANK
MANUFACTURING AND DESIGN CODES

API 650 DESIGN AND CONSTRUCTION OF WELDED STEEL TANKS
API 620 DESIGN AND CONSTRUCTION OF LARGE WELDED LOW PRESSURE STORAGE TANKS
AWWA D100 WELDED CARBON STEEL TANKS FOR WATER STORAGE
EN 14015 SPECIFICATION FOR THE DESIGN AND MANUFACTURE OF SITE BUILT, VERTICAL , CYLINDRICAL, FLAT-BOTTOMED, ABOVE GROUND, WELDED, STEEL TANKS FOR THE STORAGEOF LIQUIDS AT AMBIENT TEMPERATURE AND ABOVE

TrueTech Energy
TT - CNST Series

UNLIMITED PRODUCT OPTIONS

INGRESS PROTECTION (IP) PROTECTION DEGREE (IEC 60529)

OPTIONS

The **protection** of enclosures against ingress of dirt or against the ingress of water is defined in **IEC529** (BSEN60529 : 1991) . Conversely, an enclosure which protects equipment against ingress of particles will also protect a person from potential hazards within that enclosure, and this degree of protection is also defined as a standard.

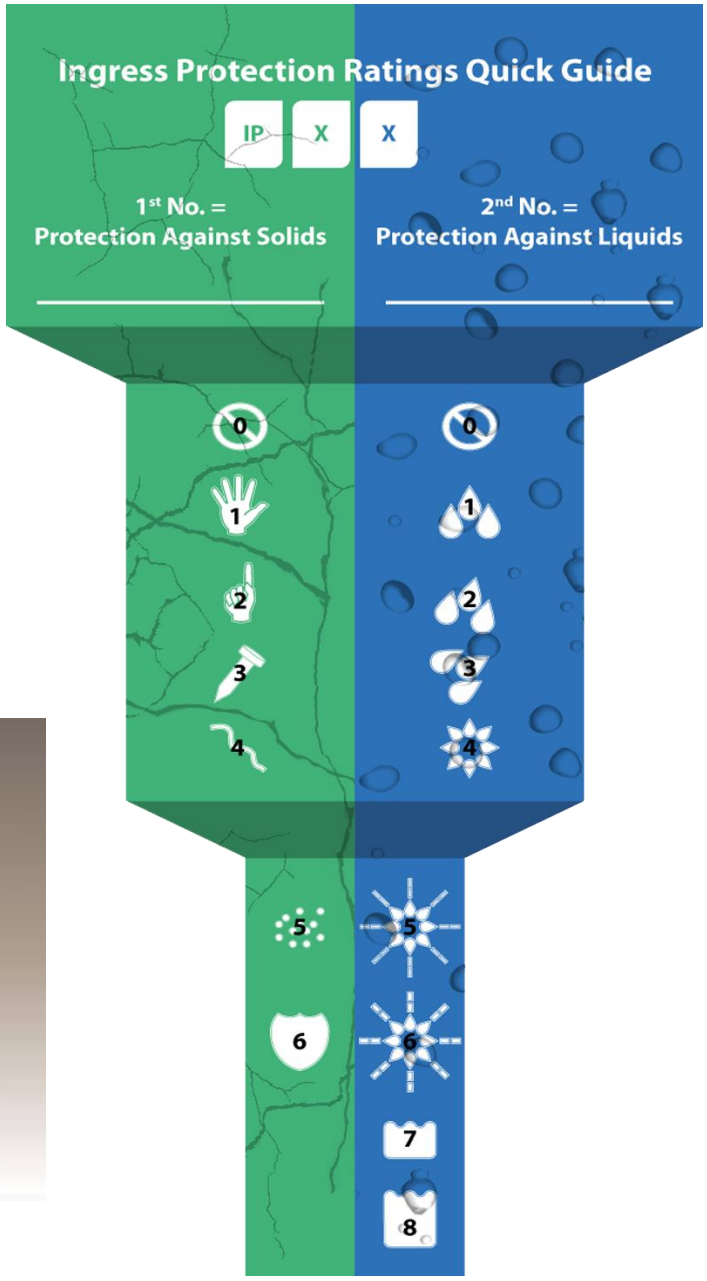

PROTECTION DEGREE OPTIONS

IEC TYPE	NEMA/UL TYPE
IP 23 (TrueTech Standard)	NEMA 1
IP 30	NEMA 2
IP32	NEMA 3
IP44	NEMA 12
IP55	NEMA 12
IP64	NEMA 3
IP65	NEMA 13
IP66	NEMA 4X ,4
IP67	NEMA 6
IP68	
IP69K	

UNLIMITED PRODUCT OPTIONS

MATERIAL OPTIONS FOR

INNER TANK , OUTER JACKET , COMMENT PANEL

HEATING ELEMENTS , ALL PIPE & CONNECTIONS

- *ASTM 304 , EN 1.4301 , UNS S30400 AUSTENITIC*
- *ASTM 304L , EN 1.4306 , UNS S30453 AUSTENITIC*
- *ASTM 316, EN 1.4401 , UNS S31600 AUSTENITIC*
- *ASTM 316L , EN 1.4404 , UNS S31603 AUSTENITIC*
- *ASTM 316L T i EN 1.4571 , UNS S31635 AUSTENITIC*
- *ASTM 430 , EN 1.4016 , UNS S43000 FERRITIC*
- *ASTM 439 (430 Ti) , EN 1.4510 , UNS S43900 FERRITIC*

- *ASTM 2205 EN 1.4462, UNS S31803 / S32205 FERRITIC – AUSTENITIC (DUBLEX)*

- CuNi 90/10 (UNS C70600) COPPER-NICKEL ALLOYS

CONSTRUCTİON ENGINEERING STRUCTURES MANLY AS PIPING FOR SEAWATER HANDLING AND HEAT EXCHANGERS IN THE SHIPBUILDING, OFFSHORE, POWER, AND DESALINATION INDUSTRIES.

- CuNiFe CUNIFE COPPER-NICKEL-IRON ALLOYS

CORROSION RESISTANT CONNECTORS FOR SEAWATER SYSTEMS
SEAWATER SYSTEMS IMPOSE SPECIAL REQUIREMENTS FOR THE CONNECTORS USED. CUNIFE PRODUCTS, LONG-TERM, SHOW A CONSIDERABLY HIGHER DURABILITY THAN OTHER MATERIALS.

Other special grades under ASTM or UNS designation could be supplied under special request. Please contact us for further details.

TrueTech Energy
TT - CNST Series

SMART MANUFACTURING SYSTEM

PROJECT BASED CUSTOM PRODUCTION & DESIGN

Our Flexible, Secure And Efficient Production Proce sses Offers High Quality Products, Satisfied Customers, Sensible Costs, Reduced Maintenance Costs , Long Service Life , Easy Installation & Commissioning And Short Lead Times

1 GALLON (3.8 LITERS) – 5.000 GALLON (18.925 LITERS) STORAGE CAPACITY

0.8KW -1600 KW ELECTRICAL POWER

120V-127V-220V-240V-380V-400V-480V-600V-690V VOLTAGE

VOLT FREE OUTPUT CONTACTS FOR BMS

4 BAR (58 PSI) - 20 BAR (290 PSI) WORKING – DESIGN PRESSURE

50HZ-60HZ FREQUENCY

VERTICAL OR HORIZINTAL INSTALLATION

MECHANICAL , DIGITAL , PLC AND PID CONTROL SYSTEMS

IP23 – IP69K PROTECTION DEGREE (SPECIAL CONTROL PANELS)

PROJECT BASED CERTIFICATION

PROJECT BASED MATERIAL OPTIONS

SPECIAL DESIGN AND CALCUATION ACCORDING TO INTERNATIONAL PRESSURE VESSEL CODES AND MATERIAL STANDARDS

SPECIAL DOCUMENTATION AND QUALITY SYSTEM (MILITARY AND NAVY PROJECTS)

We are at hand to answer all your questions in regards to your specific applications. Please contact TrueTech Energy and we will be happy to help.

TrueTech Energy
TT - CNST Series

ELECTRIC WATER HEATERS

MODEL NUMBER DESIGNATION

STEP 1	STEP II	STEP III	STEP 1V	STEP V	STEP V1	STEP VII

STEP 1
USING PLACE

TT EX = LARGE CAPACITY ELECTRICAL WATER HEATER SERIES
TT C = COMMERCIAL SERIES ELECTRICAL WATER HEATER
TT EX MAR = CONSTRUCTİON SERIES LARGE CAPACITY ELECTRICAL WATER HEATER
TT CMAR = CONSTRUCTİON SERIES COMMERCIAL ELECTRICAL WATER HEATERS
TT YMAR = YACHT SERIES ELECTRICAL WATER HEATERS
TT NAVY = NAVY SERIES ELECTRICAL WATER HEATERS
TT FARM = FARM SERIES ELECTRICAL WATER HEATERS
TT CNST = CONSTRUCTION SERIES ELECTRICAL WATER HEATERS
TT FLOW = INSTANT – FLOW SERIESELECTRICAL TANKLESS WATER HEATERS
TT CNTR = CONTAINER SERIES ELECTRICAL WATER HEATERS
TT ECO = ECONOMIC SERIES ELECTRICAL WATER HEATERS
TT HYD = CONSTRUCTİON SERIES HYDROPHORE TANK
TT FWPS = MARINE SERIES FRESH WATER PRESSURE SET

STEP II
DESIGN

EN = **EN** PRESSURE VESSEL CODE

AS = **ASME** BOILER AND PRESSURE VESSEL

UL = **UL** ELECTRIC BOOSTER AND COMMERCIAL STORAGE TANK WATER HEATER

STEP 1II
CONTROLLER TYPE

MC = MECHANICAL
DG = DIGITAL
PL = PLC
SS = SOLID STATE

STEP IV
STORAGE CAPACITY

STEP V
HEATING POWER (KW)

STEP VI
VOLTAGE . PHASE . FREQUENCY

STEP VII
MATERIAL

G = GALVANIZE COATING
SS 304 = 304 QUALITY STAINLESS STEEL
SS 304L = 304L QUALITY STAINLESS STEEL
SS 316 = 316 QUALITY STAINLESS STEEL
SS 316L = 316L QUALITY STAINLESS STEEL
SS 316Ti = 316Ti QUALITY STAINLESS STEEL
SS CNF = CuNiFe COPPER-NICKEL-IRON ALLOYS
SS CN = CuNi 90/10 COPPER – NICKEL ALLOYS
SS DX = DUBLEX

MODEL NUMBERS								
INPUT KW	TT CNST SERIES							
	TANK CAPACITY (LITER)							
	200	300	400	500	750	1000	1250	1500
6	TT CNST-EN-MC-200-6	TT CNST-EN-MC-300-6	TT CNST-EN-MC-400-6	TT CNST-EN-MC-500-6	TT CNST-EN-MC-750-6	TT CNST-EN-MC-1000-6	TT CNST-EN-MC-1250-6	TT CNST-EN-MC-1000-6
12	TT CNST-EN-MC-200-12	TT CNST-EN-MC-300-12	TT CNST-EN-MC-400-12	TT CNST-EN-MC-500-12	TT CNST-EN-MC-750-12	TT CNST-EN-MC-1000-12	TT CNST-EN-MC-1250-12	TT CNST-EN-MC-1000-12
15	TT CNST-EN-MC-200-15	TT CNST-EN-MC-300-15	TT CNST-EN-MC-400-15	TT CNST-EN-MC-500-15	TT CNST-EN-MC-750-15	TT CNST-EN-MC-1000-15	TT CNST-EN-MC-1250-15	TT CNST-EN-MC-1000-15
18	TT CNST-EN-MC-200-18	TT CNST-EN-MC-300-18	TT CNST-EN-MC-400-18	TT CNST-EN-MC-500-18	TT CNST-EN-MC-750-18	TT CNST-EN-MC-1000-18	TT CNST-EN-MC-1250-18	TT CNST-EN-MC-1000-18
24	TT CNST-EN-MC-200-24	TT CNST-EN-MC-300-24	TT CNST-EN-MC-400-24	TT CNST-EN-MC-500-24	TT CNST-EN-MC-750-24	TT CNST-EN-MC-1000-24	TT CNST-EN-MC-1250-24	TT CNST-EN-MC-1000-24
30	-	TT CNST-EN-MC-300-30	TT CNST-EN-MC-400-30	TT CNST-EN-MC-500-30	TT CNST-EN-MC-750-30	TT CNST-EN-MC-1000-30	TT CNST-EN-MC-1250-30	TT CNST-EN-MC-1000-30
36	-	TT CNST-EN-DG-300-36	TT CNST-EN-DG-400-36	TT CNST-EN-DG-500-36	TT CNST-EN-DG-750-36	TT CNST-EN-DG-1000-36	TT CNST-EN-DG-1250-36	TT CNST-EN-DG-1000-36
45	-	TT CNST-EN-DG-300-45	TT CNST-EN-DG-400-45	TT CNST-EN-DG-500-45	TT CNST-EN-DG-750-45	TT CNST-EN-DG-1000-45	TT CNST-EN-DG-1250-45	TT CNST-EN-DG-1000-45
54	-	-	TT CNST-EN-DG-400-54	TT CNST-EN-DG-500-54	TT CNST-EN-DG-750-54	TT CNST-EN-DG-1000-54	TT CNST-EN-DG-1250-54	TT CNST-EN-DG-1000-54
60	-	-	TT CNST-EN-DG-400-60	TT CNST-EN-DG-500-60	TT CNST-EN-DG-750-60	TT CNST-EN-DG-1000-60	TT CNST-EN-DG-1250-60	TT CNST-EN-DG-1000-60
72	-	-	-	TT CNST-EN-DG-500-72	TT CNST-EN-DG-750-72	TT CNST-EN-DG-1000-72	TT CNST-EN-DG-1250-72	TT CNST-EN-DG-1000-72
90	-	-	-	TT CNST-EN-DG-500-90	TT CNST-EN-DG-750-90	TT CNST-EN-DG-1000-90	TT CNST-EN-DG-1250-90	TT CNST-EN-DG-1000-90
108	-	-	-	-	TT CNST-EN-DG-750-108	TT CNST-EN-DG-1000-108	TT CNST-EN-DG-1250-108	TT CNST-EN-DG-1000-108
126	-	-	-	-	TT CNST-EN-DG-750-126	TT CNST-EN-DG-1000-126	TT CNST-EN-DG-1250-126	TT CNST-EN-DG-1000-126
144	-	-	-	-	-	TT CNST-EN-DG-1000-144	TT CNST-EN-DG-1250-144	TT CNST-EN-DG-1000-144
180	-	-	-	-	-	TT CNST-EN-DG-1000-180	TT CNST-EN-DG-1250-180	TT CNST-EN-DG-1000-180
216	-	-	-	-	-	-	TT CNST-EN-DG-1250-216	TT CNST-EN-DG-1000-216
252	-	-	-	-	-	-	-	TT CNST-EN-DG-1000-252
288	-	-	-	-	-	-	-	TT CNST-EN-DG-1000-288
324	-	-	-	-	-	-	-	-
360	-	-	-	-	-	-	-	-
396	-	-	-	-	-	-	-	-
432	-	-	-	-	-	-	-	-

MODEL NUMBERS								
INPUT KW	TT CNST SERIES							
	TANK CAPACITY (LITER)							
	2000	2250	2500	3000	3500	4000	4500	5000
6	-	-	-	-	-	-	-	-
12	-	-	-	-	-	-	-	-
15	-	-	-	-	-	-	-	-
18	-	-	-	-	-	-	-	-
24	-	-	-	-	-	-	-	-
30	TT CNST-EN-MC-2000-30	-	-	-	-	-	-	-
36	TT CNST-EN-DG-2000-36	TT CNST-EN-DG-2250-36	-	-	-	-	-	-
45	TT CNST-EN-DG-2000-45	TT CNST-EN-DG-2250-45	TT CNST-EN-DG-2500-45	-	-	-	-	-
54	TT CNST-EN-DG-2000-54	TT CNST-EN-DG-2250-54	TT CNST-EN-DG-2500-54	-	-	-	-	-
60	TT CNST-EN-DG-2000-60	TT CNST-EN-DG-2250-60	TT CNST-EN-DG-2500-60	TT CNST-EN-DG-3000-60	TT CNST-EN-DG-3500-60	TT CNST-EN-DG-4000-60	TT CNST-EN-DG-4500-60	TT CNST-EN-DG-5000-60
72	TT CNST-EN-DG-2000-72	TT CNST-EN-DG-2250-72	TT CNST-EN-DG-2500-72	TT CNST-EN-DG-3000-72	TT CNST-EN-DG-3500-72	TT CNST-EN-DG-4000-72	TT CNST-EN-DG-4500-72	TT CNST-EN-DG-5000-72
90	TT CNST-EN-DG-2000-90	TT CNST-EN-DG-2250-90	TT CNST-EN-DG-2500-90	TT CNST-EN-DG-3000-90	TT CNST-EN-DG-3500-90	TT CNST-EN-DG-4000-90	TT CNST-EN-DG-4500-90	TT CNST-EN-DG-5000-90
108	TT CNST-EN-DG-2000-108	TT CNST-EN-DG-2250-108	TT CNST-EN-DG-2500-108	TT CNST-EN-DG-3000-108	TT CNST-EN-DG-3500-108	TT CNST-EN-DG-4000-108	TT CNST-EN-DG-4500-108	TT CNST-EN-DG-5000-108
126	TT CNST-EN-DG-2000-126	TT CNST-EN-DG-2250-126	TT CNST-EN-DG-2500-126	TT CNST-EN-DG-3000-126	TT CNST-EN-DG-3500-126	TT CNST-EN-DG-4000-126	TT CNST-EN-DG-4500-126	TT CNST-EN-DG-5000-126
144	TT CNST-EN-DG-2000-144	TT CNST-EN-DG-2250-144	TT CNST-EN-DG-2500-144	TT CNST-EN-DG-3000-144	TT CNST-EN-DG-3500-144	TT CNST-EN-DG-4000-144	TT CNST-EN-DG-4500-144	TT CNST-EN-DG-5000-144
180	TT CNST-EN-DG-2000-180	TT CNST-EN-DG-2250-180	TT CNST-EN-DG-2500-180	TT CNST-EN-DG-3000-180	TT CNST-EN-DG-3500-180	TT CNST-EN-DG-4000-180	TT CNST-EN-DG-4500-180	TT CNST-EN-DG-5000-180
216	TT CNST-EN-DG-2000-216	TT CNST-EN-DG-2250-216	TT CNST-EN-DG-2500-216	TT CNST-EN-DG-3000-216	TT CNST-EN-DG-3500-216	TT CNST-EN-DG-4000-216	TT CNST-EN-DG-4500-216	TT CNST-EN-DG-5000-216
252	TT CNST-EN-DG-2000-252	TT CNST-EN-DG-2250-252	TT CNST-EN-DG-2500-252	TT CNST-EN-DG-3000-252	TT CNST-EN-DG-3500-252	TT CNST-EN-DG-4000-252	TT CNST-EN-DG-4500-252	TT CNST-EN-DG-5000-252
288	TT CNST-EN-DG-2000-288	TT CNST-EN-DG-2250-288	TT CNST-EN-DG-2500-288	TT CNST-EN-DG-3000-288	TT CNST-EN-DG-3500-288	TT CNST-EN-DG-4000-288	TT CNST-EN-DG-4500-288	TT CNST-EN-DG-5000-288
324	TT CNST-EN-DG-2000-324	TT CNST-EN-DG-2250-324	TT CNST-EN-DG-2500-324	TT CNST-EN-DG-3000-324	TT CNST-EN-DG-3500-324	TT CNST-EN-DG-4000-324	TT CNST-EN-DG-4500-324	TT CNST-EN-DG-5000-324
360	-	-	TT CNST-EN-DG-2500-360	TT CNST-EN-DG-3000-360	TT CNST-EN-DG-3500-360	TT CNST-EN-DG-4000-360	TT CNST-EN-DG-4500-360	TT CNST-EN-DG-5000-360
396	-	-	-	-	-	TT CNST-EN-DG-4000-396	TT CNST-EN-DG-4500-396	TT CNST-EN-DG-5000-396
432	-	-	-	-	-	TT CNST-EN-DG-4000-432	TT CNST-EN-DG-4500-432	TT CNST-EN-DG-5000-432

TT CNST SERIES

RECOVERY CAPACITIES

INPUT KW	EQUIVALENT BTU/H.	ΔT (TEMPERATURE DIFFERENCE)											
		UNITS	40°F (22°C)	50°F (28°C)	60°F (33°C)	70°F (39°C)	80°F (45°C)	90°F (50°C)	100°F (56°C)	110°F (61°C)	120°F (67°C)	130°F (72°C)	140°F (78°C)
6	20473	LPH (LT/H)	235,0	188,0	157,0	134,0	117,0	104,0	94,0	85,0	78,0	72,0	67,0
		GPH (GAL/H)	62,0	50,0	41,0	35,0	31,0	28,0	25,0	23,0	21,0	19,0	18,0
12	40946	LPH (LT/H)	470,0	376,0	313,0	268,0	235,0	209,0	188,0	171,0	157,0	145,0	134,0
		GPH (GAL/H)	124,0	99,0	83,0	71,0	62,0	55,0	50,0	45,0	41,0	38,0	35,0
15	51183	LPH (LT/H)	587,0	470,0	391,0	335,0	294,0	261,0	235,0	213,0	196,0	181,0	168,0
		GPH (GAL/H)	155,0	124,0	103,0	89,0	78,0	69,0	62,0	56,0	52,0	48,0	44,0
18	61416	LPH (LT/H)	705,0	564,0	470,0	403,0	352,0	313,0	282,0	256,0	235,0	217,0	201,0
		GPH (GAL/H)	186,0	149,0	124,0	106,0	93,0	83,0	74,0	68,0	62,0	57,0	53,0
24	81888	LPH (LT/H)	939,0	751,0	626,0	537,0	470,0	417,0	376,0	342,0	313,0	289,0	268,0
		GPH (GAL/H)	248,0	199,0	165,0	142,0	124,0	110,0	99,0	90,0	83,0	76,0	71,0
30	102360	LPH (LT/H)	1174,0	939,0	783,0	671,0	587,0	522,0	470,0	427,0	391,0	361,0	335,0
		GPH (GAL/H)	310,0	248,0	207,0	177,0	155,0	138,0	124,0	113,0	103,0	95,0	89,0
36	122832	LPH (LT/H)	1409,0	1127,0	939,0	805,0	705,0	626,0	564,0	512,0	470,0	434,0	403,0
		GPH (GAL/H)	372,0	298,0	248,0	213,0	186,0	165,0	149,0	135,0	124,0	115,0	106,0
45	153540	LPH (LT/H)	1761,0	1409,0	1174,0	1006,0	881,0	783,0	705,0	640,0	587,0	542,0	503,0
		GPH (GAL/H)	465,0	372,0	310,0	266,0	233,0	207,0	186,0	169,0	155,0	143,0	133,0
54	184248	LPH (LT/H)	2114,0	1691,0	1409,0	1208,0	1057,0	939,0	845,0	769,0	705,0	650,0	604,0
		GPH (GAL/H)	558,0	447,0	372,0	319,0	279,0	248,0	223,0	203,0	186,0	172,0	160,0
60	204720	LPH (LT/H)	2347,0	1878,0	1567,0	1340,0	1173,0	1045,0	939,0	856,0	780,0	719,0	674,0
		GPH (GAL/H)	620,0	496,0	414,0	354,0	310,0	276,0	248,0	226,0	206,0	190,0	178,0
72	245664	LPH (LT/H)	2816,0	2256,0	1877,0	1615,0	1408,0	1249,0	1128,0	1022,0	939,0	871,0	803,0
		GPH (GAL/H)	744,0	596,0	496,0	426,0	372,0	330,0	298,0	270,0	248,0	230,0	212,0
90	307080	LPH (LT/H)	3518,0	2765,0	2346,0	1985,0	1720,0	1548,0	1382,0	1269,0	1156,0	1075,0	992,0
		GPH (GAL/H)	930,0	730,0	620,0	525,0	455,0	409,0	366,0	336,0	306,0	284,0	262,0
108	368496	LPH (LT/H)	4221,8	3317,1	2814,5	2381,5	2064,0	1857,6	1658,6	1522,6	1386,3	1290,0	1190,8
		GPH (GAL/H)	1115,4	876,4	743,6	629,2	545,3	490,8	438,2	402,3	366,3	340,8	314,6
126	429912	LPH (LT/H)	4925,5	3870,0	3283,6	2778,5	2408,0	2167,2	1935,0	1776,4	1617,3	1505,0	1389,2
		GPH (GAL/H)	1301,3	1022,5	867,5	734,1	636,2	572,6	511,2	469,3	427,3	397,6	367,0
144	491328	LPH (LT/H)	5629,1	4422,9	3752,7	3175,4	2752,0	2476,8	2211,4	2030,2	1848,4	1720,0	1587,7
		GPH (GAL/H)	1487,2	1168,5	991,5	838,9	727,1	654,4	584,3	536,4	488,3	454,4	419,5
180	614160	LPH (LT/H)	7036,4	5528,6	4690,9	3969,2	3440,0	3096,0	2764,3	2537,7	2310,4	2150,0	1984,6
		GPH (GAL/H)	1859,0	1460,7	1239,3	1048,7	908,9	818,0	730,3	670,5	610,4	568,0	524,3
216	736992	LPH (LT/H)	8443,6	6634,3	5629,1	4763,1	4128,0	3715,2	3317,1	3045,2	2772,5	2580,0	2381,5
		GPH (GAL/H)	2230,8	1752,8	1487,2	1258,4	1090,6	981,6	876,4	804,6	732,5	681,6	629,2
252	859824	LPH (LT/H)	9850,9	7740,0	6567,3	5556,9	4816,0	4334,4	3870,0	3552,8	3234,6	3010,0	2778,5
		GPH (GAL/H)	2602,6	2044,9	1735,1	1468,1	1272,4	1145,2	1022,5	938,6	854,6	795,2	734,1
288	982656	LPH (LT/H)	11258,2	8845,7	7505,5	6350,8	5504,0	4953,6	4422,9	4060,3	3696,7	3440,0	3175,4
		GPH (GAL/H)	2974,4	2337,0	1982,9	1677,9	1454,2	1308,7	1168,5	1072,7	976,7	908,9	838,9
324	1105488	LPH (LT/H)	12665,5	9951,4	8443,6	7144,6	6192,0	5572,8	4975,7	4567,9	4158,8	3870,0	3572,3
		GPH (GAL/H)	3346,2	2629,2	2230,8	1887,6	1635,9	1472,3	1314,6	1206,8	1098,8	1022,5	943,8
360	1228320	LPH (LT/H)	14072,7	11057,1	9381,8	7938,5	6880,0	6192,0	5528,6	5075,4	4620,9	4300,0	3969,2
		GPH (GAL/H)	3718,0	2921,3	2478,7	2097,3	1817,7	1635,9	1460,7	1340,9	1220,8	1136,1	1048,7
369	1259028	LPH (LT/H)	14424,5	11333,6	9616,4	8136,9	7052,0	6346,8	5666,8	5202,3	4736,4	4407,5	4068,5
		GPH (GAL/H)	3811,0	2994,3	2540,7	2149,8	1863,1	1676,8	1497,2	1374,5	1251,4	1164,5	1074,9
432	1473984	LPH (LT/H)	16887,3	13268,6	11258,2	9526,2	8256,0	7430,4	6634,3	6090,5	5545,1	5160,0	4763,1
		GPH (GAL/H)	4461,6	3505,6	2974,4	2516,8	2181,2	1963,1	1752,8	1609,1	1465,0	1363,3	1258,4

TT CNST SERIES

STANDARD KW INPUT AND AMPERAGE

KW INPUT	BTU/H EQUIVALENT	NO. OF ELEMENTS	NO. OF CONTROL STEPS	KW PER ELEMENT	NO. OF CONTACTORS	FULL LOAD CURRENT IN AMPERES						
						208	277	380	415	440	480	600
6	20472	1	1	6	1	16,67	12,52	9,13	8,36	7,88	7,23	5,78
10	34120	1	1	10	1	27,79	20,87	15,21	13,93	13,14	12,04	9,63
12	40944	1	1	12	1	33,35	25,04	18,25	16,71	15,76	14,45	11,56
15	51180	1	1	15	1	41,69	31,3	22,82	20,89	19,71	18,06	14,45
18	61416	1	1	18	1	50,02	37,56	27,38	25,07	23,65	21,68	17,34
20	68240	2	2	10	2	55,58	41,74	30,42	27,86	26,27	24,08	19,27
24	81888	2	1	12	2	66,7	50,08	36,51	33,43	31,53	28,9	23,12
30	102360	2	1	15	2	83,37	62,6	45,63	41,79	39,41	36,13	28,9
36	122832	2	1	18	2	100,04	75,12	54,76	50,14	47,29	43,35	34,68
45	153540	3	2	15	3	125,06	93,9	68,45	62,68	59,12	54,19	43,35
60	204720	4	2	15	4	162,06	125,21	91,27	83,57	78,82	72,25	57,8
72	245664	4	2	18	4	200,09	150,25	109,52	100,29	94,59	86,71	69,36
90	307080	5	3	18	5	250,11	187,81	136,9	125,36	118,23	108,38	86,71
108	368496	6	3	18	6	300,13	225,37	164,28	150,43	141,88	130,06	104,05
126	429912	7	4	18	7	350,16	262,93	191,66	175,5	165,53	151,73	121,39
144	491328	8	4	18	8	400,18	300,49	219,04	200,57	189,17	173,41	138,73
180	614160	10	5	18	10	500,22	375,62	273,81	250,71	236,47	216,76	173,41
216	736992	12	6	18	12	600,27	450,74	328,57	300,86	283,76	260,12	208,09
252	859824	14	7	18	14	700,31	525,87	378,95	351	331,06	303,47	242,77
288	982656	16	8	18	16	800,36	600,99	438,09	401,14	378,35	346,82	277,46
324	1105488	18	8	18	18	900,4	676,11	492,85	451,28	425,64	390,17	312,14
360	1228320	20	8	18	20	1000,44	751,24	547,61	501,43	472,94	433,53	346,82
396	1351152	22	8	18	22	1100,49	826,36	602,37	551,57	520,23	476,88	381,5
432	1473984	24	8	18	24	1200,53	901,48	657,13	601,71	567,52	520,23	416,18

Product and Technical Support

TrueTech Energy

Although out of sight, the Truetech heater keeps on working, 24/7, year after year

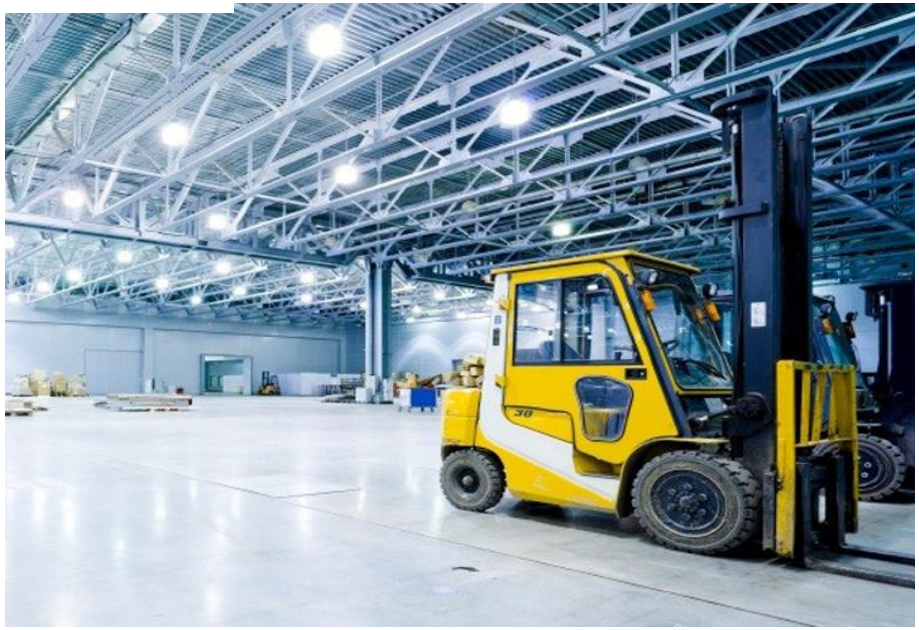

Imes Sanayi Sitesi A Blok 103 sok. NO:32/B Umraniye , ISTANBUL / TURKEY

Tel (Sales) : 00902164993466
Fax : 00902164993468
Email : info@truetech.com.tr
Web : www.truetech.com.tr

- General Management
- Sales & Export Management
- Marketing
- Design | Project Management
- Order Management | Operations Scheduling
- Production
- Research & Development | Quality Management
- Purchase
- IT